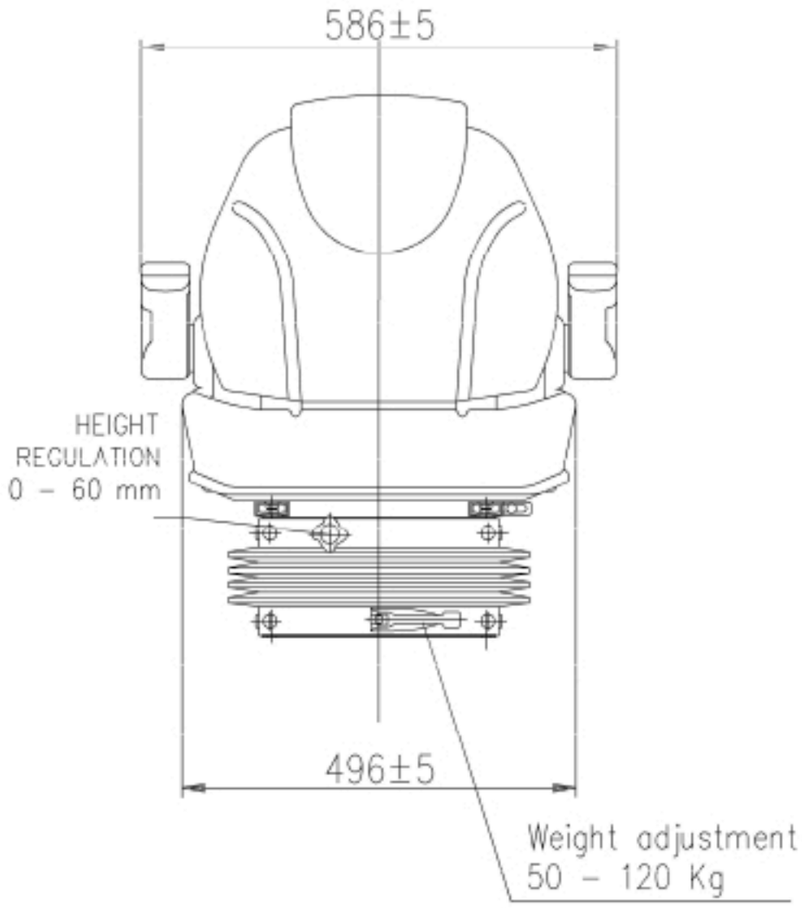
586±5
HEIGHT
REGULATION
0 - 60 mm
496±5
Weight adjustment
50 - 120 Kg

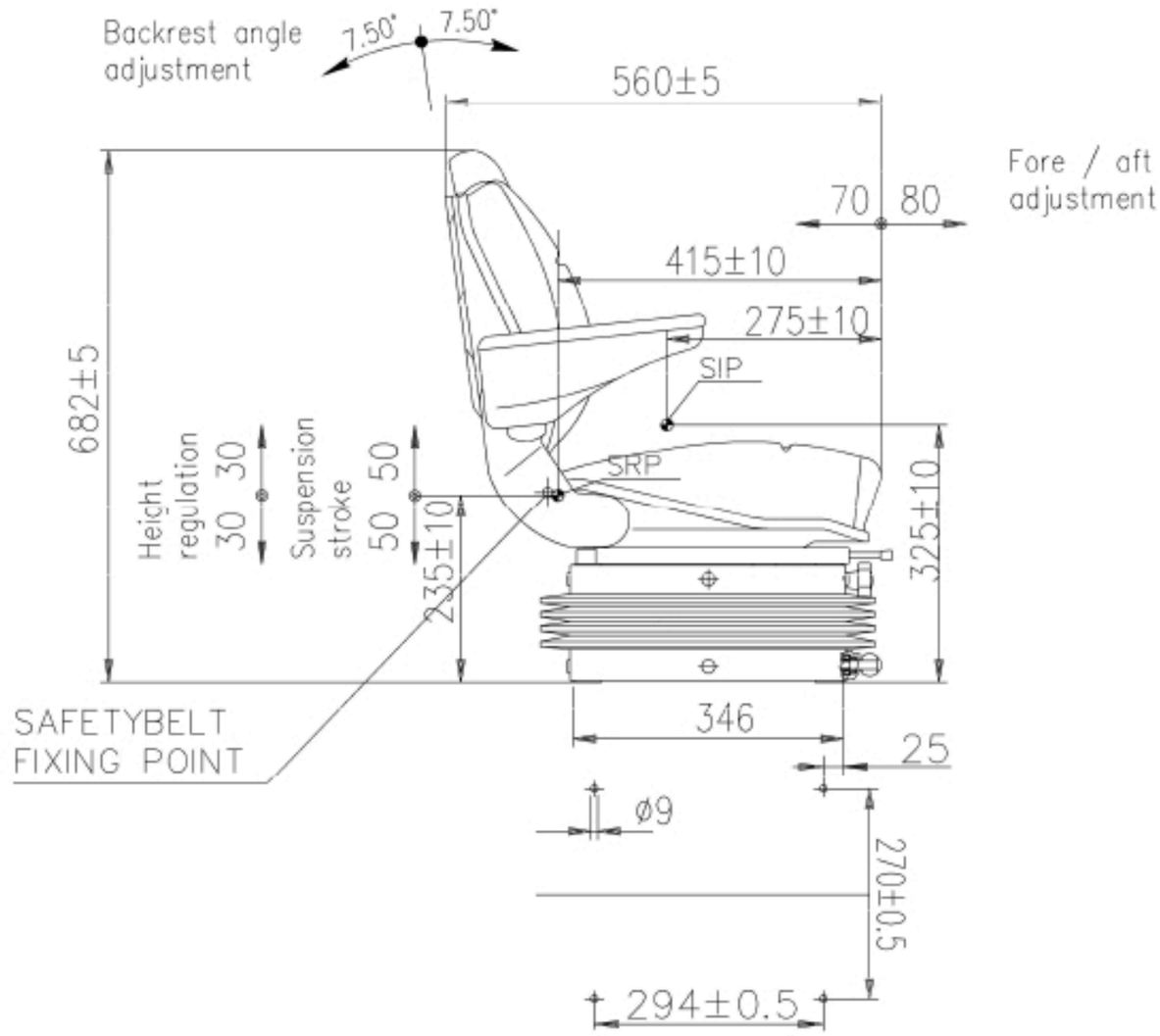
Backrest angle
adjustment
7.50°
7.50°
560±5
Fore / aft
adjustment
70
80
415±10
275±10
SIP
SRP
682±5
Height
regulation
30
30
Suspension
stroke
50
50
235±10
325±10
SAFETYBELT
FIXING POINT
346
25
ø9
270±0.5
294±0.5