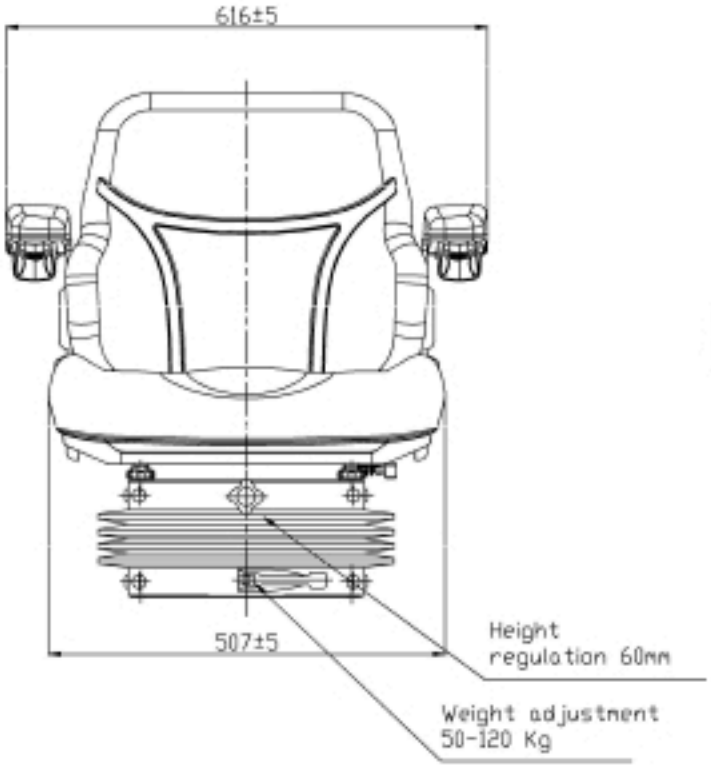
616±5
507±5
Height
regulation 60mm
Weight adjustment
50-120 Kg

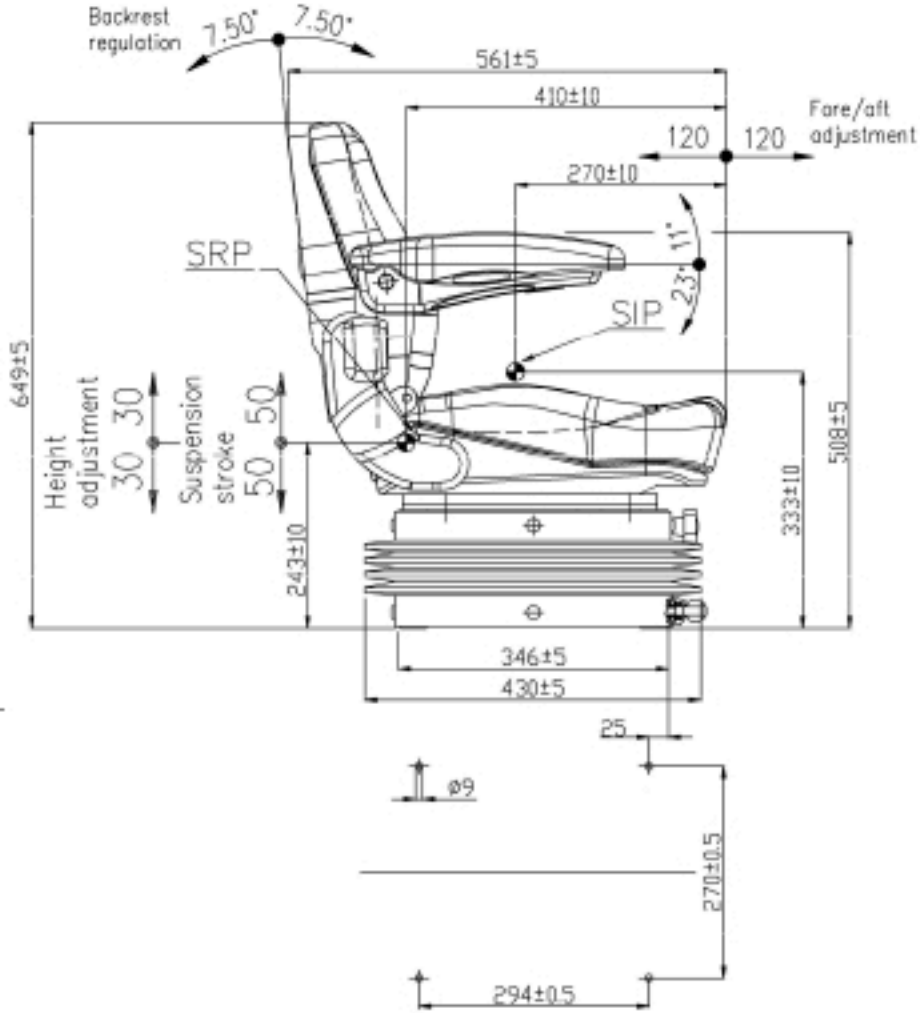
Backrest
regulation
7.50°
7.50°
561±5
410±10
120
120
Fore/aft
adjustment
270±10
11°
23°
SRP
SIP
649±5
Height
adjustment
30
30
Suspension
stroke
50
50
243±10
333±10
508±5
346±5
430±5
25
ø9
270±0.5
294±0.5