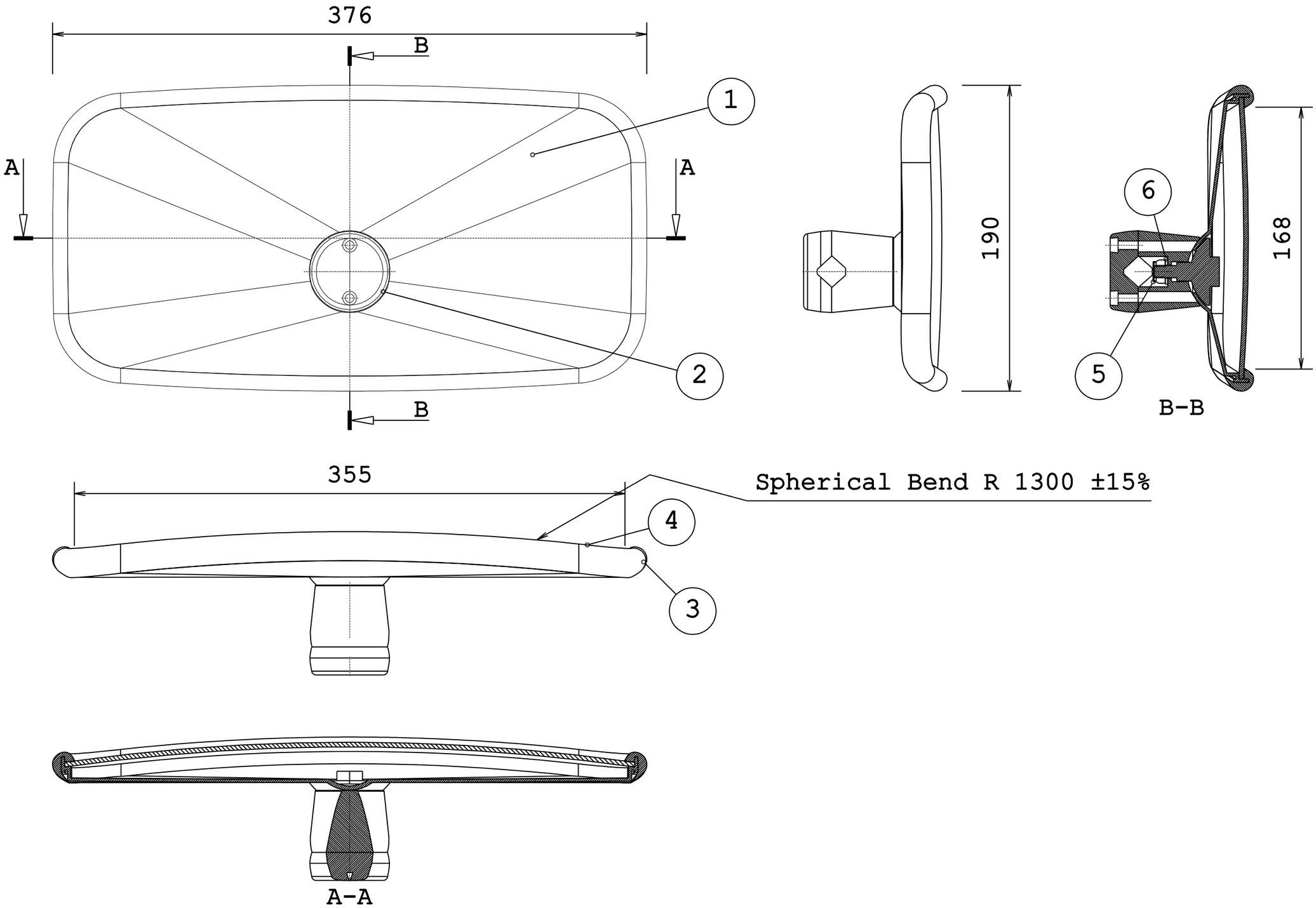
376
B
1
A
A
2
B
190
6
168
5
B-B
355
Spherical Bend R 1300 ±15%
4
3
A-A